TTB1840 Operating Guide

Compact and Cordless Scrubber Dryer

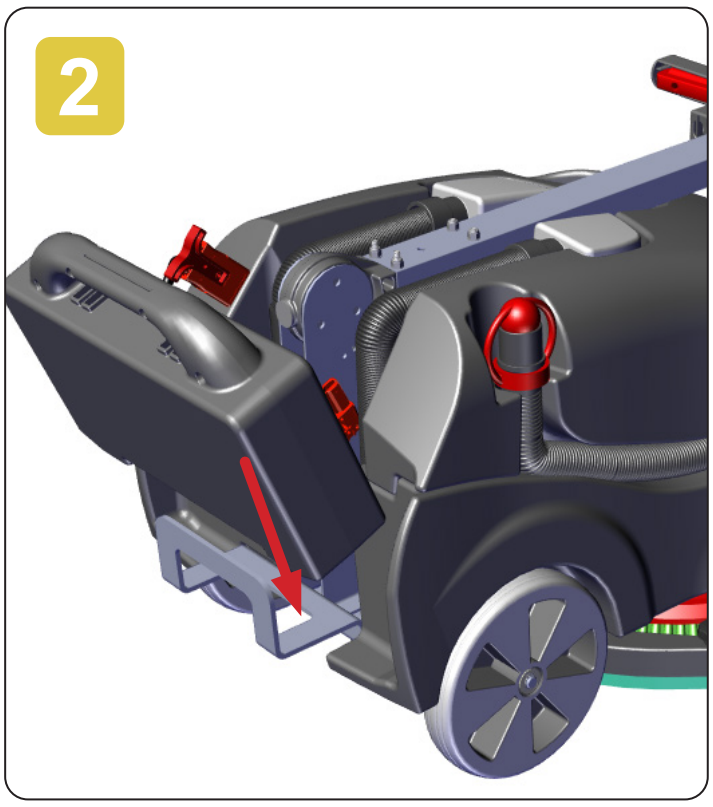

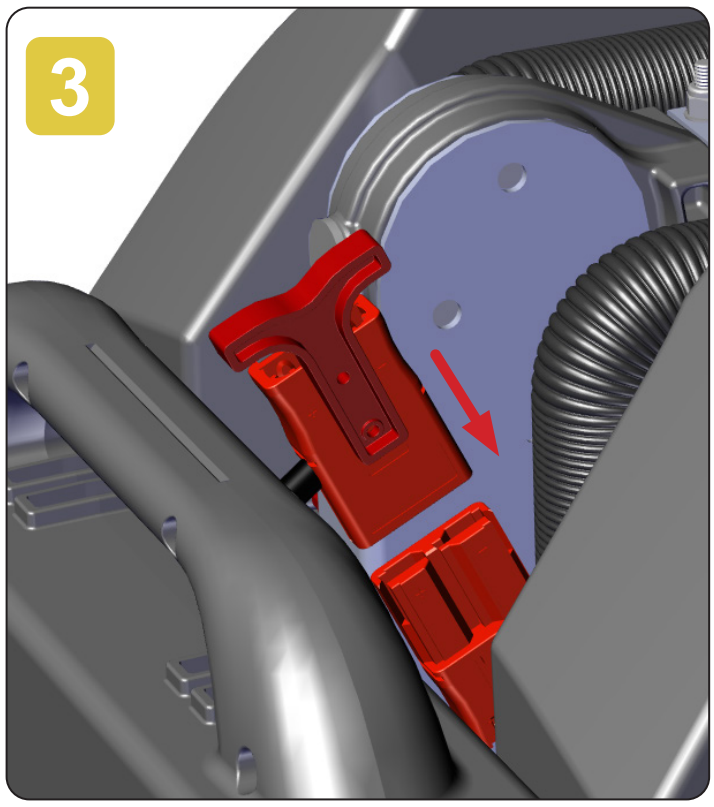

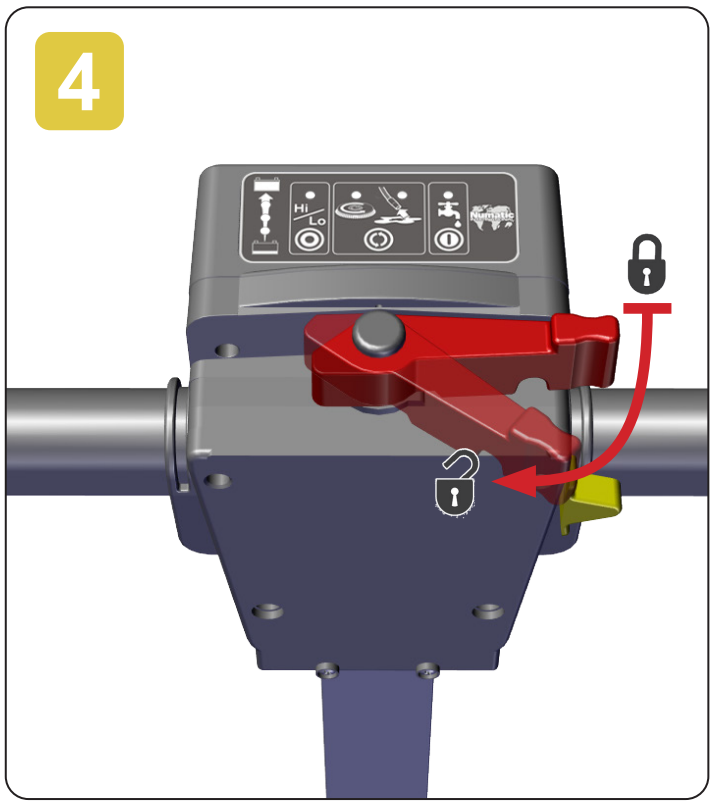

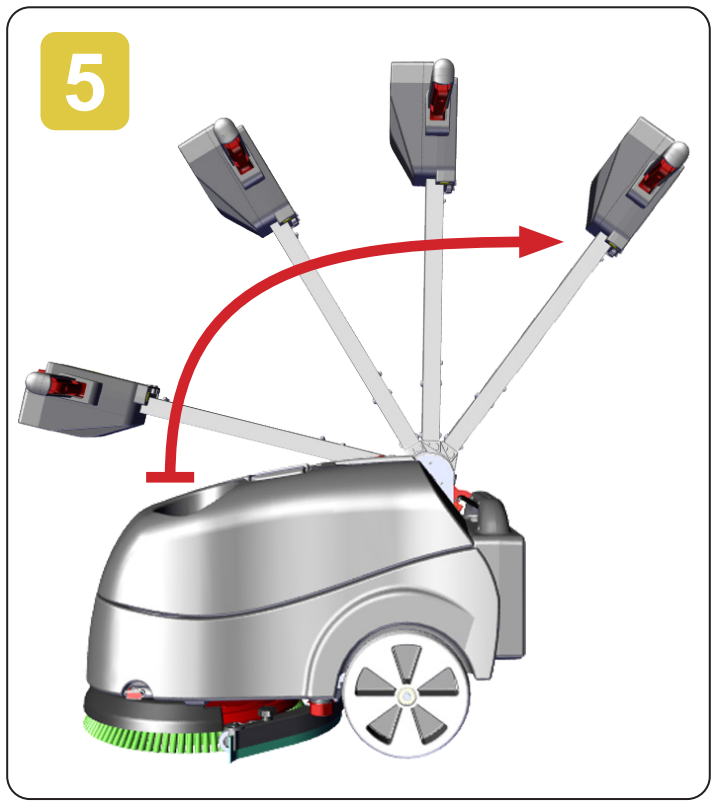

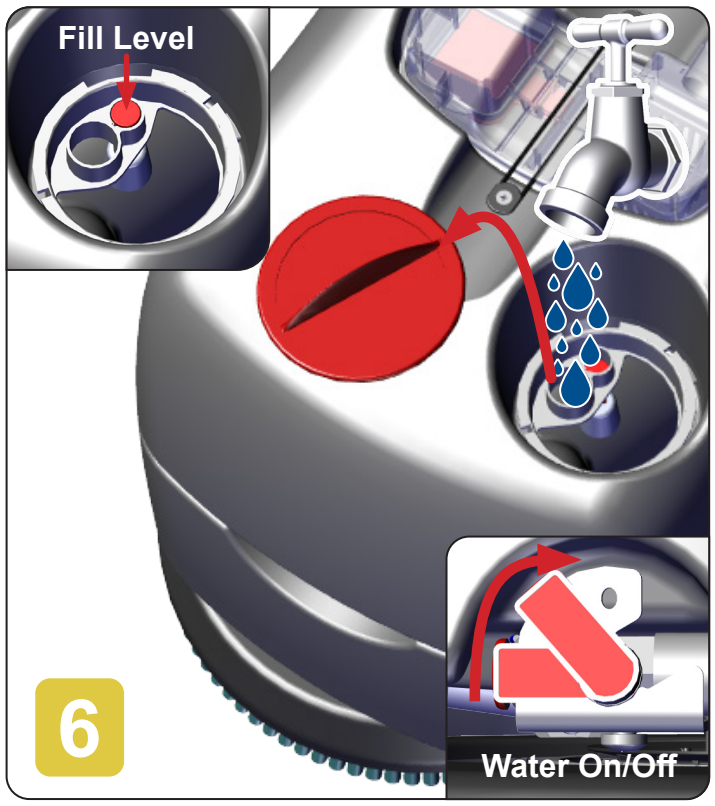

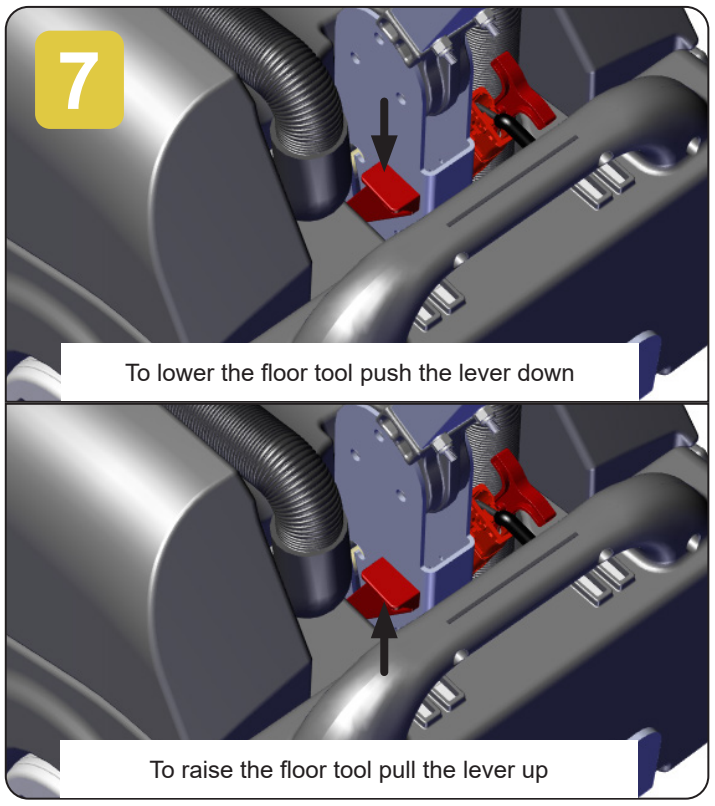

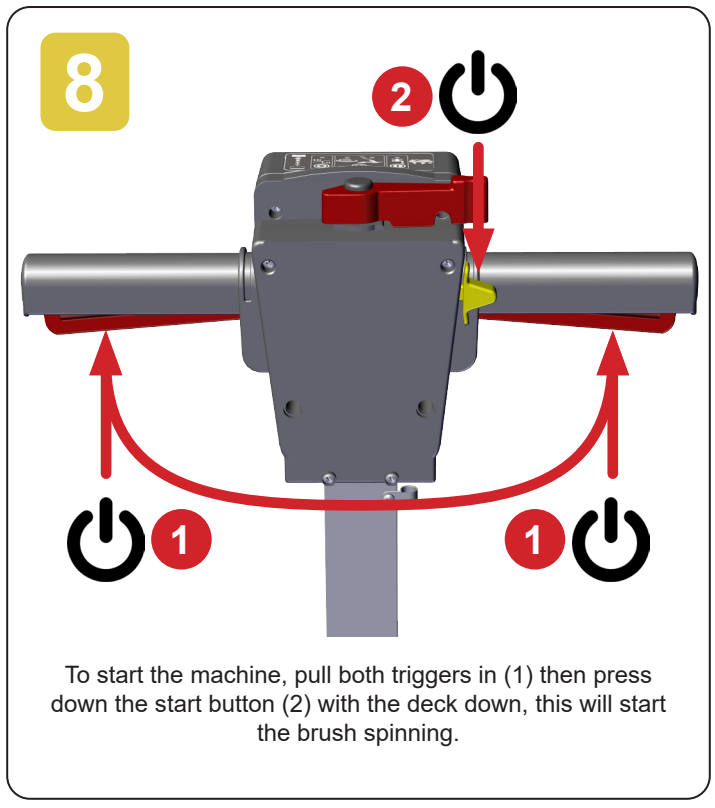

To start the machine, pull both triggers in (1) then press down the start button (2) with the deck down, this will start the brush spinning.

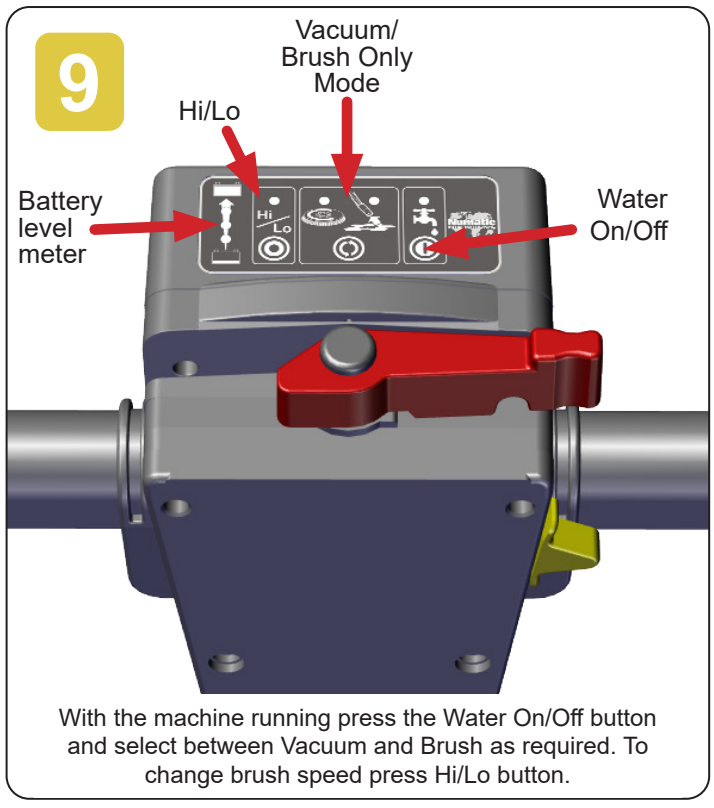

With the machine running press the Water On/Off button and select between Vacuum and Brush as required. To change brush speed press Hi/Lo button.

©Numatic International Limited 2023. Specification subject to change without prior notice. numatic.com