1840NX/1840NX-R Operating Guide

Compact and Cordless Scrubber Dryer

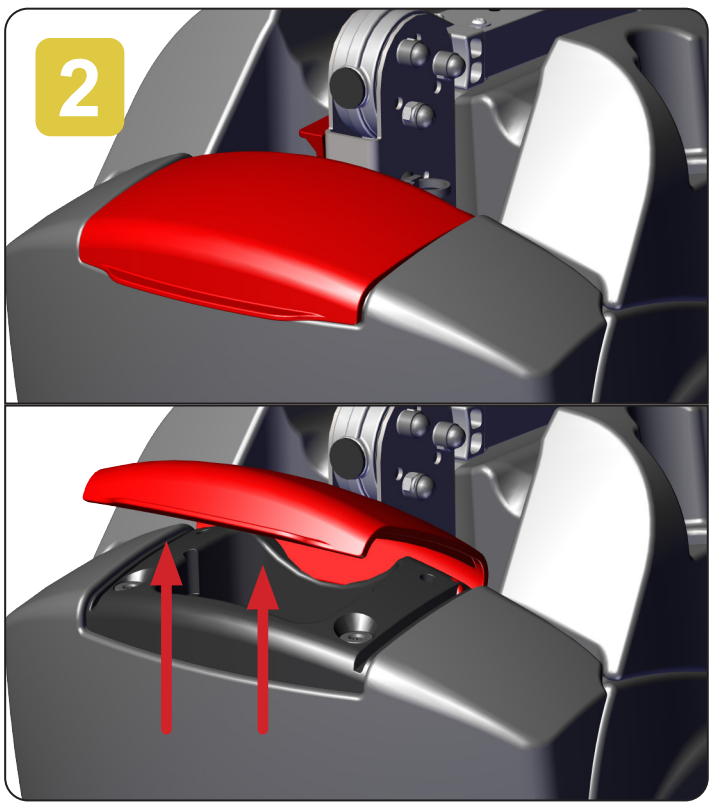

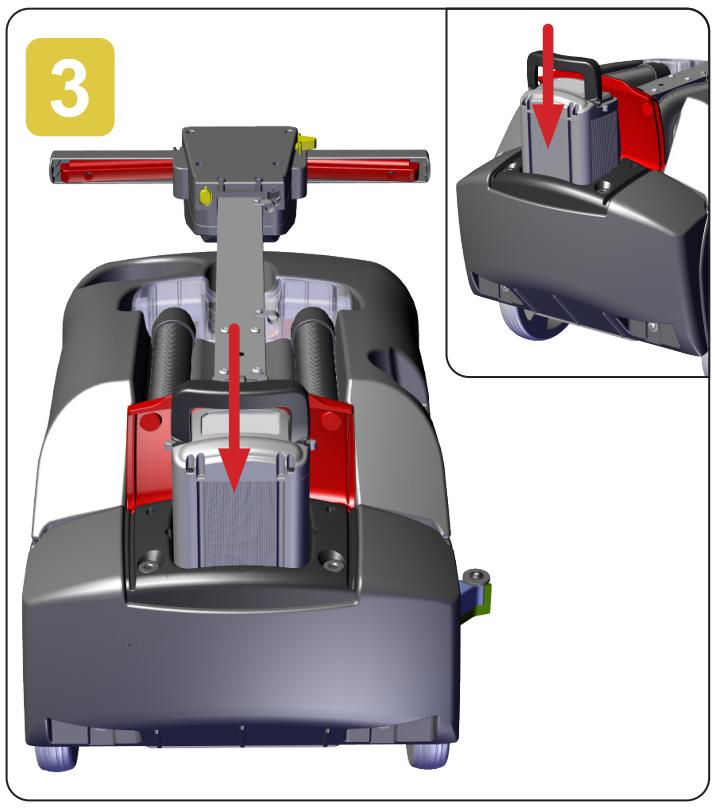

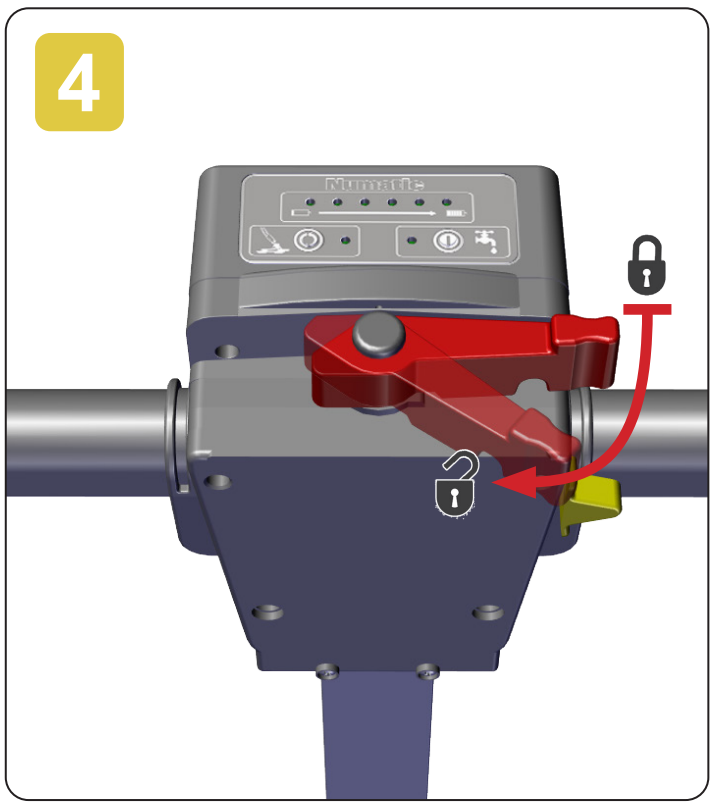

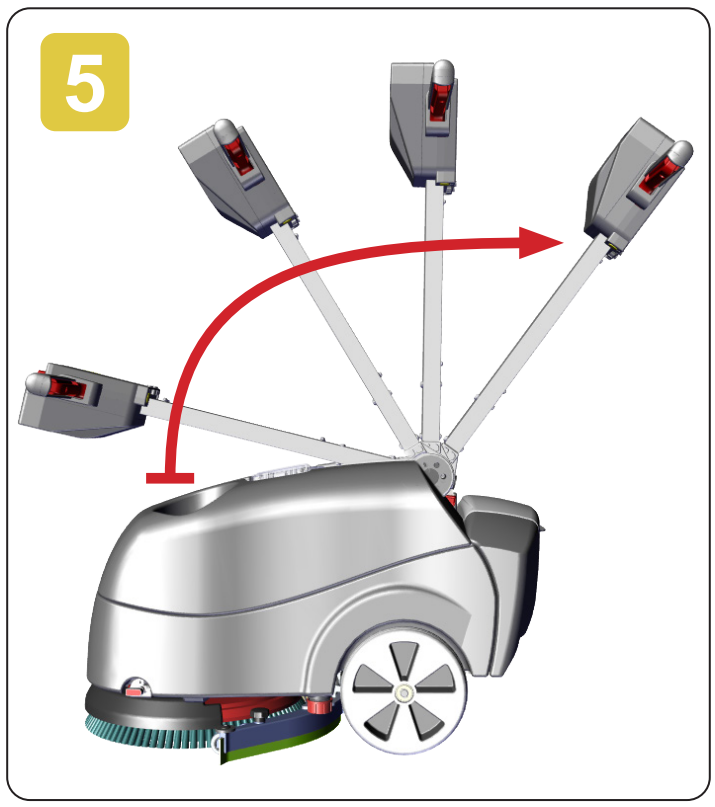

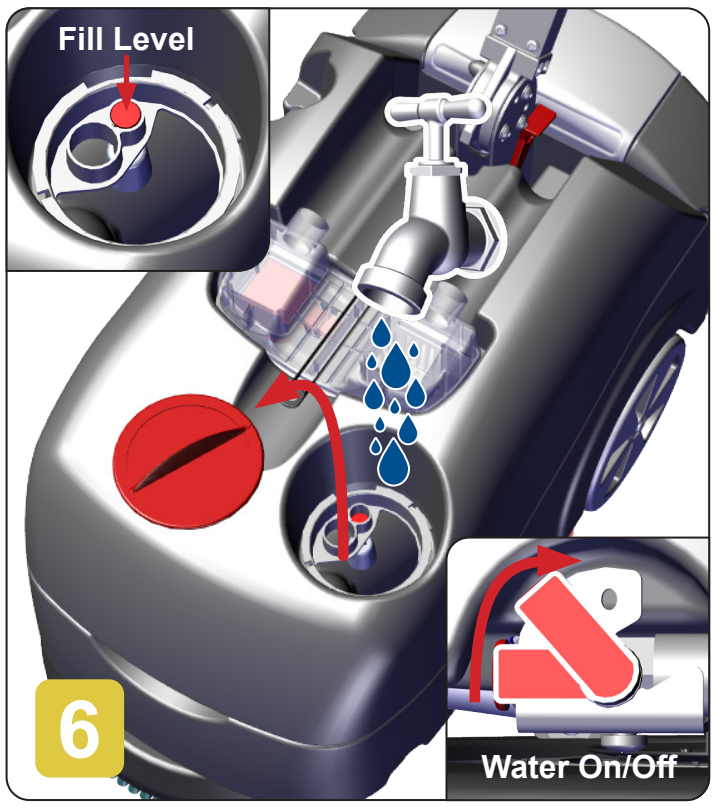

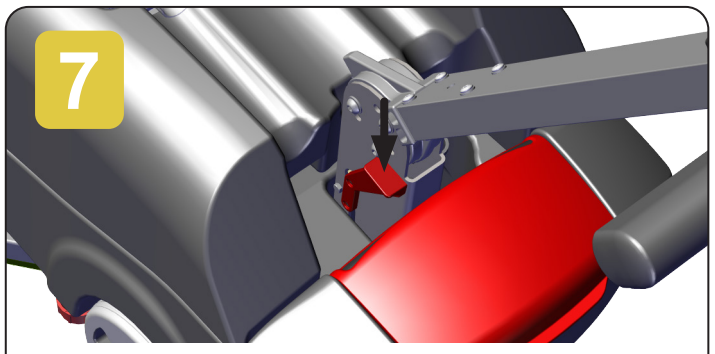

To lower the floor tool push the lever down

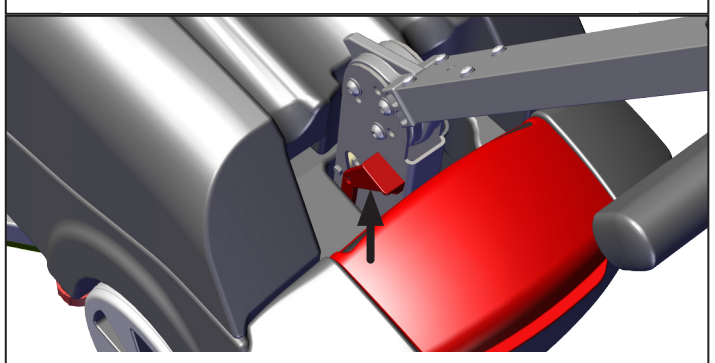

To raise the floor tool pull the lever up

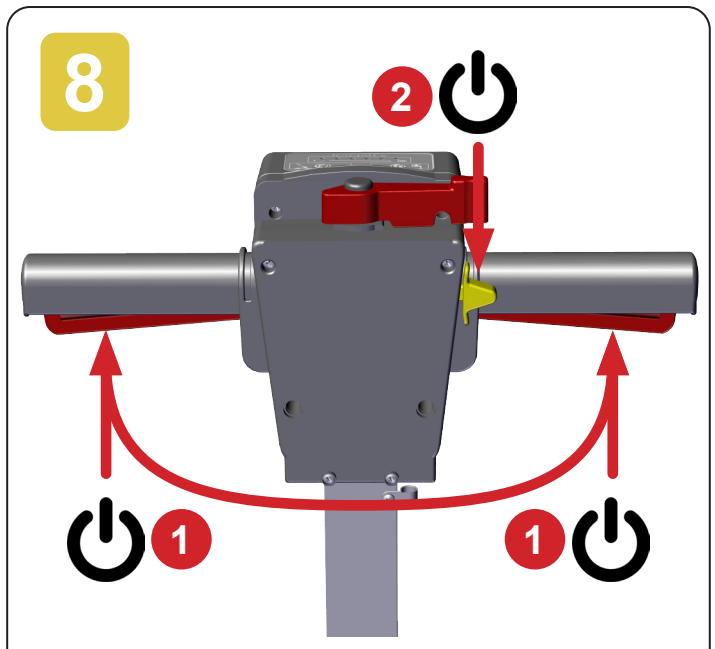

To start the machine, pull both triggers in (1) then press down the start button (2) with the deck down, this will start the brush spinning.

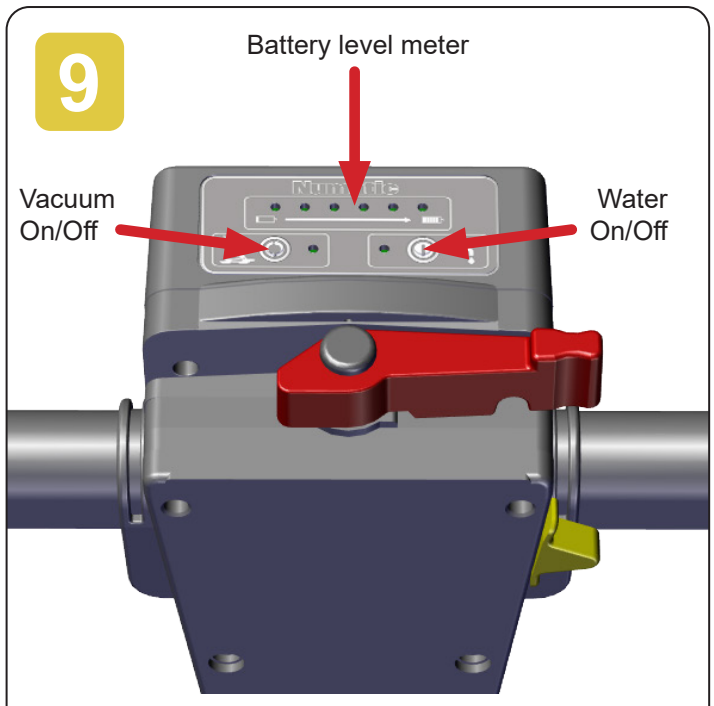

With the machine running press the Water On/Off button and the Vacuum On/Off button as required.

©Numatic International Limited 2024. Specification subject to change without prior notice. numatic.com